www.reelschematic.com

Daiwa
COMMITTED TO TOTAL QUALITY

SPINNING REEL ST7070/9070

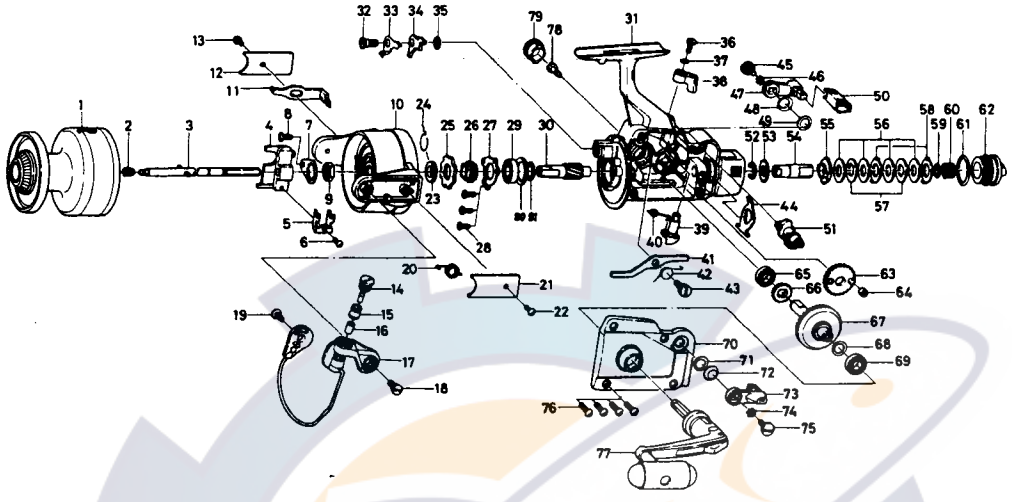

Key No.	Parts No.	Parts Name	Price Each
1	E02-8201	Spool assembly	11.50
2	B77-7201	Main shaft spring	0.50
3	B77-6901	Main shaft	4.35
4	B77-7301	Oscillating slider	1.00
5	B77-7401	Oscillating slider retainer	0.40
6	351-6605	Oscillating slider screw	0.35
7	B02-1602	Rotor nut retaining plate	0.60
8	B01-7101	Rotor nut retaining plate screw	0.35
9	340-8301	Rotor nut	0.50
10	B86-8401	Rotor	18.75
11	B77-9801	Bail trip lever	0.70
12	B77-6605	Bail trip cover	0.65
13	B01-7102	Bail trip cover screw	0.45
14	B77-6701	Line roller screw	1.15
15	B86-8501	Line roller	9.70
16	B44-3401	Line roller bushing	0.35
17	B88-2001	Bail	7.85
18	B66-5801	Bail arm screw	1.00
19	B84-2101	Bail trip cam screw	0.60
20	B19-7201	Bail spring	0.50
21	B77-6405	Bail spring cover	0.65
22	B01-7102	Bail spring cover screw	0.45
23	B13-5702	Spring holder	0.45
24	B92-9401	Anti-reverse pawl spring	0.50
25	280-5403	Anti-reverse ratchet	1.20
26	B32-1301	Spacer	0.95
27	B67-8401	Bearing retainer	0.60
28	B01-5801	Bearing retainer screw	0.35
29	637-6101	Ball bearing	9.60
30	B90-1601	Pinion gear	9.00
31	B86-7205	Body	35.90
32	B67-0801	Anti-reverse pawl screw	0.50
33	B86-8301	Anti-reverse pawl plate	0.55
34	B86-8201	Anti-reverse pawl	1.15
35	375-1503	Anti-reverse pawl washer	0.35
36	B88-1201	Anti-reverse lever screw	0.50
37	160-8401	Anti-reverse lever lock washer	0.35
38	B86-7702	Anti-reverse lever	1.15
39	B86-7601	Anti-reverse cam	0.85
40	B91-2001	Anti-reverse cam spring	0.50
41	B86-7801	Anti-reverse cam plate	0.75
42	B86-8001	Anti-reverse cam plate spring	0.40
43	B86-7901	Anti-reverse cam plate screw	0.55
44	B86-8701	Drag adjusting leaf spring	0.70
45	B91-2101	Drag lever screw A	1.35
46	160-8101	Drag lever lock washer A	0.35
47	B86-8903	Drag lever A	1.35
48	B86-8801	Drag lever washer A	0.35
49	373-7800	Drag lever washer B	0.35
50	B86-9001	Drag lever plate	0.85
51	B86-8601	Drag cam	1.30
52	321-1101	Key washer retainer	0.40
53	B78-1401	Key washer A.	0.40
54	B86-9101	Drag washer holder	1.80
55	B86-9201	Drag washer holder collar	0.55
56	372-9605	Drag washer	0.70
57	E02-8001	Key washer B	0.35
58	B86-9301	Eared washer	0.35
59	B27-1501	Drag coil spring washer	0.35
60	E02-4101	Drag coil spring	0.50
61	637-2701	Drag screw ring	0.75
62	E02-8101	Drag screw	9.75
63	B78-9701	Oscillating gear	0.95
64	B78-9801	Oscillating gear collar	0.35
65	636-6011	Ball bearing	8.40
66	402-3801	Oscillating pinion gear	1.25
67	B90-1701	Drive gear	13.95
68	371-2800	Drive gear washer	0.40
69	636-6011	Ball bearing	8.40
70	B86-9605	Side cover	12.50
71	373-7800	Drag lever washer C	0.35
72	B86-8801	Drag lever washer D	0.35
73	B86-8903	Drag lever B	1.35
74	160-8101	Drag lever lock washer B	0.35
75	B91-2101	Drag lever screw B	1.35
76	353-0703	Side cover screw	0.35
77	E02-6101	Handle assembly	18.40
78	B27-4801	Handle lock screw	0.35
79	B86-9901	Handle screw cap	0.55
80	B88-0801	Bearing washer A	0.50
81	B90-9201	Bearing washer B	0.35
9070 Special Parts			
1	E02-8401	Spool assembly	11.50
10	B87-0201	Rotor	18.75
17	B87-0401	Bail	8.05
31	B86-7206	Body	35.90
70	B86-9606	Side cover	12.50
77	E03-2001	Handle assembly	18.65